VACUUM TUBE SOCKET

VTB9 SERIES (Suitable for Home Audio)

9 Pin Miniature Conventional Wiring and PCB Type Socket

NEW

Features

- With panel saddle mounting
- Phosphorous bronze pin terminal
- Glassfiber filled PPS black body Insulating material
- Easy mount with collar attached socket
- Excellent clip contact for high-end audio

Applications

- Applicable to all types of high-end audio using vacuum tube
- Specially for Home Audio

Standard Dimensions

VTB9-ST-1

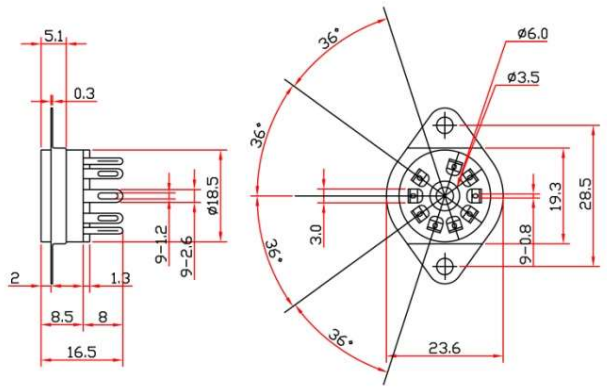

VTB9-ST-2

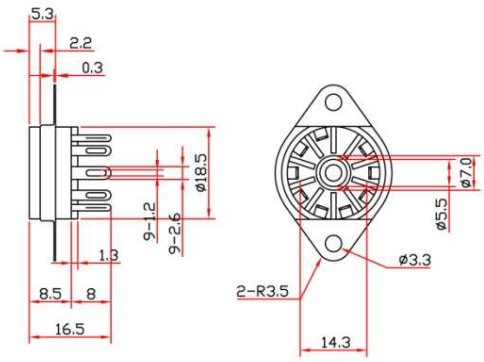
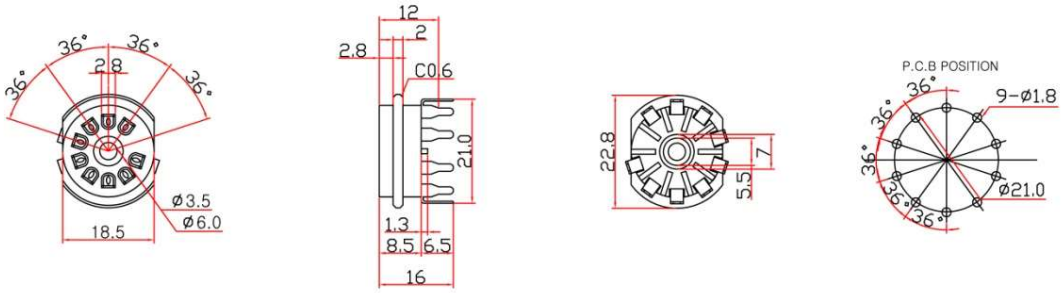
VTB9-PT