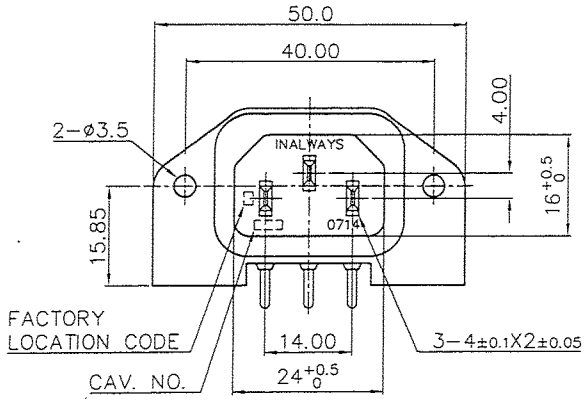

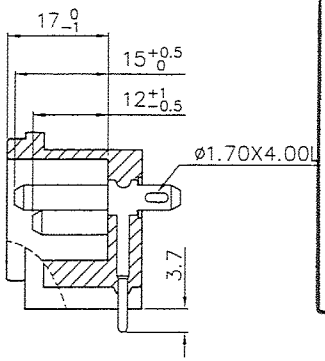

客户用圖

SPECIFICATION

A: MATERIAL:
1. HOUSING: PBT WITH GLASS FIBER FILLER, UL 94V-0
2. TERMINAL: COPPER ALLOY, MATTE TIN PLATED

B: CHARACTERISTICS:
1. RATING: 10A 250V~ EUROPE/NORTH AMERICA
   15A 125V~ NORTH AMERICA
2. INSULATION RESISTANCE: 100MΩ MIN, AT 500V DC
3. ELECTRIC STRENGTH: AC 2,000V FOR ONE MINUTE

C: APPROVALS:
UL, CSA, ENEC & CCC

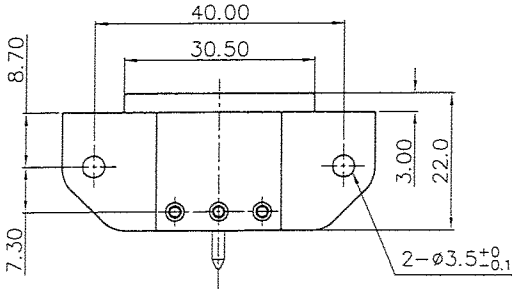

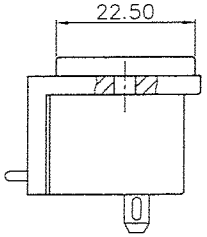

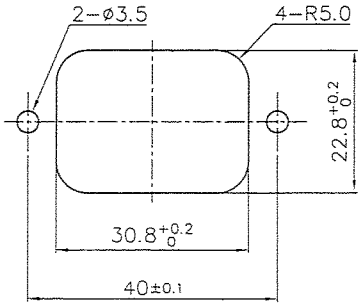

PANEL CUT-OUT

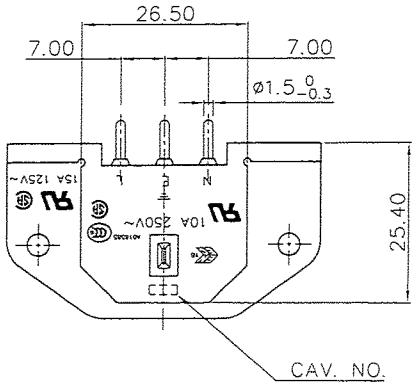

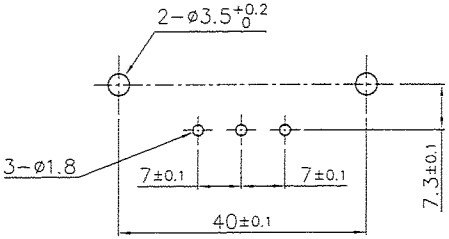

PCB LAYOUT

圖面管制中心
嚴禁 2013.6.07 複印
力瑋出圖章
發圖者: 李孟玲

REV	DATE	DOCUMENT	DESCRIPTION
N			
M	2012.07.04	DGR12015	RENEW REVISION
L	2011.11.18	DGR11024	CHANGE SAFETY MARK
K	2010.07.30	DGR10011(R1)	CHANGE PLATED
J	2005.11.22	DGR05078	RENEW REVISION

力瑋實業股份有限公司
INALWAYS CORPORATION

TOLERANCE UNLESS OTHERWISE MARKED
DIMENSION: .000 : ±0.1 / .00 : ±0.2 / .0 : ±0.3
ANGULAR: ±3°

A4	UNIT	SCALE	SHEET
	mm	1 : 1	1 of 1

PART NO.:	NAME:
0714-FR7	AC INLET 3P SOCKET (SCREW ON)
MATERIAL: SEE ABOVE	SPEC.: IEC 60320-1, C14

APPROVED	CHECKED	DESIGNER	NOTE:
2012.05.30	2012.05.30	2012.JUL.05	

DOC.#: S714-0012