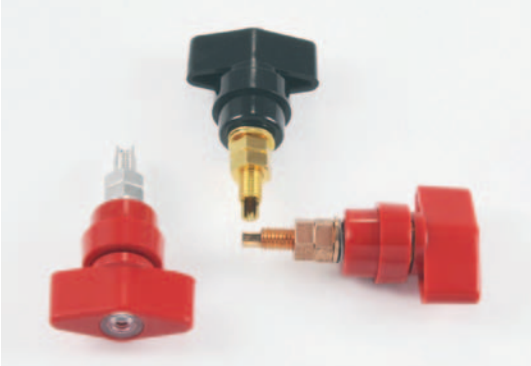

Binding posts Classic, 8 * 70mm

Binding posts Evo, 8 * 70mm

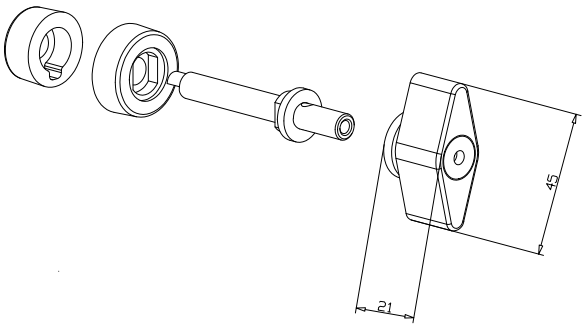

Copper terminal M8 isometric representation

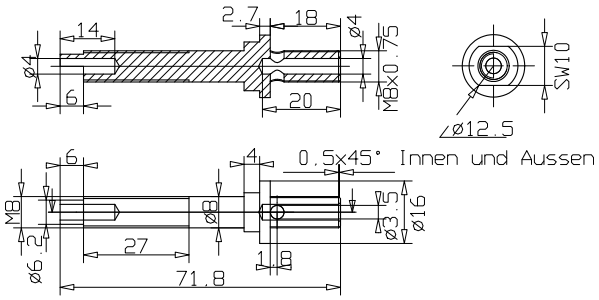

TPCU870C (formerly polcu8)
Binding posts Classic, 8*70mm, pure copper
Colour
BK (black)
RD (red)

TPCU870GC (formerly polcu8g)
Binding posts Classic, 8*70mm, copper gold-plated
Colour
BK (black)
RD (red)

TPCU870E
Binding posts Evo, 6*70mm, pure copper
Colour
BK (black)
RD (red)

TPCU870GE
Binding posts Evo, 6*70mm, copper gold-plated
Colour
BK (black)
RD (red)